HAF-505
55 CFM
COALESCING FILTER

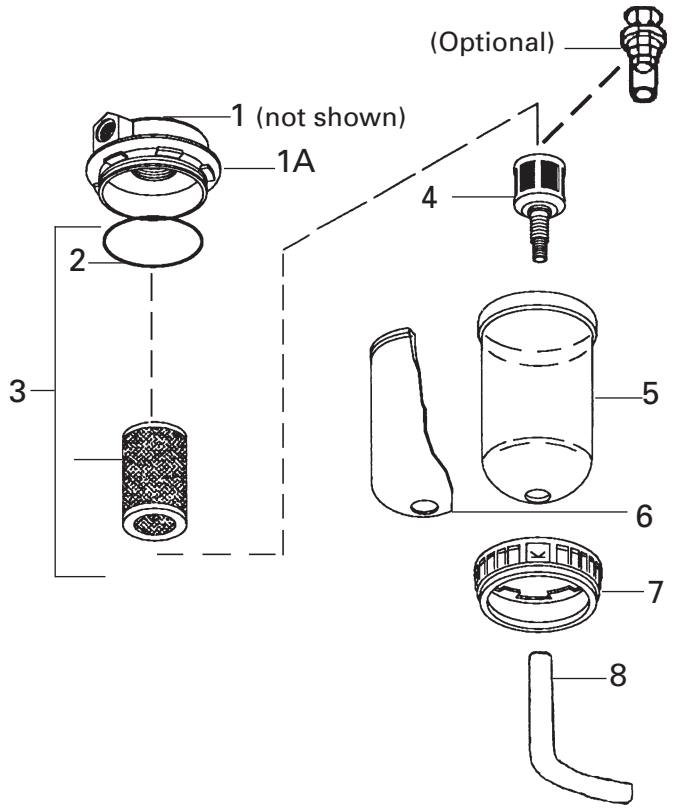

Figure 1 HAF-505 & HAF-511 55 CFM Air Filter

PARTS LIST

Ref No. No.	Replacement Part No.	Description	Ind. Parts Required
1	HAF-404	Filter Change Indicator (not shown)	1
1A	---	Cover	1
2	---	O-Ring	1
3	HAF-28	Filter and O-Ring Kit	1
4	HAF-18	Automatic Drain (Standard)	1
5	HAF-8	Plastic Bowl	1
6	HAF-19	Metal Bowl Guard	1
7	HAF-409	Clamp Ring	1
8	---	1/2 x 3/8 Vinyl Tubing 6'	1
9	HAF-11	Manual Drain (Optional)	1

DESCRIPTION

The HAF-505, 55 CFM filter is designed to remove dirt, pipe scale and liquid aerosol. It includes a 0.01 micron filter element and automatic mechanical drain.

CA PROP 65

PROP 65 WARNING
WARNING: This product contains chemicals known to the State of California to cause cancer and birth defects or other reproductive harm.

SPECIFICATIONS

Air Filter:

Air Inlet	1/2" NPT(F)
Air Outlet	1/2" NPT(F)
Air Flow Capacity	55 CFM
Maximum Inlet Pressure	150 PSIG (10.3 Bar)
Maximum Operating Pressure	150 PSIG (10.3 Bar)
Maximum Temperature	150° F (65.6°C)
Filter	0.01 Micron

WARNING

Risk of personal injury.
Risk of property damage.

Except as otherwise specified by the manufacturer, this product is specifically designed for compressed air service and use with any other fluid (liquid or gas) is a misapplication. For example, use with or injection of certain hazardous gases in the system (such as oxygen or liquid petroleum gas) could be harmful to the unit or result in a combustible condition that may cause fire or explosion. Manufacturer's warranties are void in the event of misapplication and manufacturer assumes no responsibility for any resulting loss.

INSTALLATION

WARNING

Risk of injury. Do not place unit in service without metal bowl guard installed. Filter units are sold only with metal bowl guards. To minimize the danger of flying fragments in the event of plastic bowl failure, guard must not be removed. If the unit is in service without the metal bowl guard installed, manufacturer's warranties are void and the manufacturer assumes no responsibility for any resulting loss. If unit has been in service and does not have a metal bowl guard, order one and install before placing back in service.

CAUTION

Certain solvents, paints and chemicals may attack plastic bowl and can cause bowl failure. Do not use near these materials.

INSTALLATION (continued)

1. Be sure to read all **"Warnings"** and **"Cautions"** in this manual and on the unit before installation or using this equipment.
2. Install filter as close as possible to point where air is being used. Install main air shut-off valve and standard pipe union (supplied by user) upstream of filter to allow maintenance to unit.
3. Install unit with air flow through filter in direction of arrow on top of unit.
4. Minimum 1/2" piping is recommended. Avoid using fittings, couplings, etc. that restrict air flow.
5. Mount filter in a vertical position.
6. Do not install filter in an application where the pressure drop will exceed 20 psi. For example, a quick opening valve located upstream from the filter could cause a momentary pressure drop in excess of 20 psi.
7. Maximum inlet pressure and operating temperature is: 150 PSIG (10.3 bar) and 150° F (65.6° C).
8. A 6' length of vinyl tubing is shipped loose with the unit. Slide over automatic drain which protrudes from bottom of bowl. Place other end of vinyl tubing into appropriate receptable (i.e. below booth grating, can, etc.). Prevent vinyl tubing from becoming kinked which would prevent free movement of liquids discharged from the automatic drain.
9. An optional manual drain (HAF-11) can be installed in place of the automatic drain.

OPERATION

After the unit is installed and ready to use;

1. Attach air hose(s) to outlet ball valve(s), selecting regulated and/or non-regulated according to the application (not supplied).
2. Open main shut-off valve upstream of filter.
3. Open ball valve(s) (not supplied) to supply air to spray gun or tool being used.
4. After use, shut off ball valve(s) and bleed off residual air in hose(s).

Note

The filter change indicator only operates when air is flowing. It will always be green when there is no flow.

MAINTENANCE

WARNING

Certain solvents, paints and chemicals may attack plastic bowl and can cause bowl failure. Do not use near these materials. When bowl becomes dirty, wipe only with a clean, dry cloth. Immediately replace any crazed, cracked, damaged or deteriorated plastic bowl with a new plastic bowl. Reinstall metal bowl guard.

CAUTION

Risk of injury. Components under pressure. Relieve air pressure before performing maintenance.

1. Before performing maintenance on unit, close main shut-off valve located upstream of filter. Bleed off residual air in unit.
2. To open filter, press button located on clamp ring and rotate ring either clockwise or counterclockwise while pulling down on ring. The metal bowl guard and plastic bowl can then be removed from the filter head.
3. Remove the filter element by loosening counterclockwise. Clean or replace the filter element. Frequency of element replacement will depend upon air quality, air usage, and condition of the air piping. It is recommended to check the element change indicator daily, and replace when indicator turns red.
4. Inspect o-ring for damage. Replace if necessary.
5. Inspect plastic bowl for signs of damage such as cracks, crazing or deterioration. Replace if necessary. See **"Caution"** in column 2.

WARNING

Risk of injury. Do not place unit in service without metal bowl guard installed.

6. Before placing unit back into service, make sure plastic bowl and metal bowl guard are properly installed and securely locked in place.
7. Confirm automatic drain operates properly after unit is in operation. Refer to Service Bulletin SB-6-149 which provides automatic drain service information. Replace if necessary.

ACCESSORIES

HAF-407
CleanAir™ Mounting Bracket Assembly Kit

NOTES

WARRANTY POLICY

DeVilbiss products are covered by Finishing Brands one year materials and workmanship limited warranty. The use of any parts or accessories, from a source other than Finishing Brands, will void all warranties. For specific warranty information please contact the closest Finishing Brands location listed below.

Finishing Brands reserves the right to modify equipment specifications without prior notice. DeVilbiss®, Ransburg®, BGK®, and Binks® are registered trademarks of Carlisle Fluid Technologies, Inc., dba Finishing Brands. ©2016 Carlisle Fluid Technologies, Inc., dba Finishing Brands. All rights reserved.

DeVilbiss is part of Finishing Brands, a global leader in innovative spray finishing technologies. For technical assistance or to locate an authorized distributor, contact one of our international sales and customer support locations below.

USA/Canada
www.devilbiss.com
info@carlisleft.com
Tel: 1-800-992-4657
Fax: 1-888-246-5732

Mexico
www.carlisleft.com.mx
ventas@carlisleft.com.mx
Tel: 011 52 55 5321 2300
Fax: 011 52 55 5310 4790

Brazil
www.devilbiss.com.br
vendas@carlisleft.com.br
Tel: +55 11 5641 2776
Fax: 55 11 5641 1256

United Kingdom
www.finishingbrands.eu
info@carlisleft.eu
Tel: +44 (0)1202 571 111
Fax: +44 (0)1202 573 488

France
www.finishingbrands.eu
info@carlisleft.eu
Tel: +33(0)475 75 27 00
Fax: +33(0)475 75 27 59

Germany
www.finishingbrands.eu
info@carlisleft.eu
Tel: +49 (0) 6074 403 1
Fax: +49 (0) 6074 403 281

China
www.finishingbrands.com.cn
mkt@carlisleft.com.cn
Tel: +8621-3373 0108
Fax: +8621-3373 0308

Japan
www.ransburg.co.jp
overseas-sales@carlisleft.co.jp
Tel: 081 45 785 6421
Fax: 081 45 785 6517

Australia
www.finishingbrands.com.au
sales@carlisleft.com.au
Tel: +61 (0) 2 8525 7555
Fax: +61 (0) 2 8525 7500

DeVilbiss Automotive Refinishing is part of Finishing Brands, a global leader in innovative spray finishing technologies. For technical assistance or to locate an authorized distributor, contact one of our sales and customer support locations below.

USA/Canada
www.autorefinishdevilbiss.com
askus@carlisleft.com
Toll Free Tel: 1-800-445-3988
Toll Free Fax: 1-800-445-6643

Mexico
www.autorefinishdevilbiss.com.mx
Toll Free Tel: 1-888-835-6232 USA